Hindawi
Advances in Fuzzy Systems
Volume 2023, Article ID 3252763, 15 pages
https://doi.org/10.1155/2023/3252763

Research Article

Design and Simulation of a Physician-Based Fuzzy System for Ventilator Adjustments in ARDS Patients to Ensure Lung Protection

Jimmy Nabende Wanzala,[1] **Michael Robson Atim**,[1] **and Johnes Obungoloch**[2]

[1]*Physics Department, Mbarara University of Science and Technology, Mbarara, Uganda*
[2]*Biomedical Sciences and Engineering Department, Mbarara University of Science and Technology, Mbarara, Uganda*

Correspondence should be addressed to Jimmy Nabende Wanzala; jwanzala@must.ac.ug

Received 11 July 2022; Revised 9 December 2022; Accepted 23 February 2023; Published 9 March 2023

Academic Editor: Ferdinando Di Martino

Copyright © 2023 Jimmy Nabende Wanzala et al. This is an open access article distributed under the Creative Commons Attribution License, which permits unrestricted use, distribution, and reproduction in any medium, provided the original work is properly cited.

The acute respiratory distress syndrome patients largely need a mechanical ventilator intervention. There are procedures that have been developed to guide the physicians during the ventilation of the patient. Berlin definition of the acute respiratory distress syndrome has been developed with ventilator adjustment settings/procedures. The procedures may however be a challenge for some physicians to remember during the intense ventilator intervention. Physicians are found to make human errors that may lead to the death of the patient. This, therefore, calls for the need of a logic system that will reason for the physician, that is, guide the physician. A fuzzy logic system was used to build the fuzzy set rules based on the Berlin definition. The MATLAB Simulink was used to simulate the system. The results show that the fuzzy-based ARDS Berlin definition can guide the physician on the adjustments to be made during the ventilation.

1. Introduction

1.1. Acute Respiratory Distress Syndrome (ARDS). Acute respiratory distress syndrome (ARDS) [1–3] is a deadly respiratory failure [4] that is determined using arterial blood gas levels (hypoxemia with a ration of PaO_2 to FiO_2 being less than or equal to 300 mm·Hg) and chest imaging of bilateral opacities. Bilateral opacity is a type of pulmonary opacity (increased pulmonary attenuation where the amount of air in the lung airspaces decreases due to the airspaces being filled with fluid that is leaked into the alveoli due to the lung damage). Therefore, since the fluid is leaked into the alveoli causing pulmonary edema, there is also an oxygen deficiency in the arterials. Furthermore, the fluids in excess also increase the mortality rate of patients with ARDS [5]; there is a need of detecting it early enough to reduce the mortality rate.

The etiology of ARDS is a direct lung injury but due to mainly two causes, namely, pulmonary ARDS and extra-pulmonary ARDS. For the case of the pulmonary ARDS, the lungs are damaged by factors within the lungs such as lung contusion (bruise on the lung due to chest blow), smoke inhalation, viral pneumonia (when a lung tissue is swollen due to a virus), and fat embolism (when fats from a bone slide into the blood vessels) [6]; and for the case of extra-pulmonary ARDS, the lungs are affected by external factors [7] such as head injury, trauma, cardiopulmonary bypass (use of an artificial ventilator during surgery to help in blood circulation and maintaining the oxygen content in the patient's blood). The two etiological ways are inconsistent with different MV, implying that there is a need for a chest scan to determine the causes of the ARDS such that effective settings are implemented by the operator as well as use the lung injury preventive methods.

There is a similarity in the treatment of neonatal ARDS and coronavirus disease 2019 (COVID-19) ARDS [8, 9], and there is also a similarity in the treatment of respiratory distress syndrome (not ARDS) and COVID-19; this

therefore implies that a system developed can be used to treat different cases, that is, neonatal ARDS, COVID-19 related to ARDS, respiratory distress syndrome which is not acute, and COVID-19. There has been development in the procedures taken during the treatment of patients with ARDS [10], that is, using the Berlin definition or Kigali definition. For this study, the Berlin definition was taken as the case study in the development of the fuzzified Berlin definition system.

1.2. ARDS Berlin Definition. Berlin definition consists of mainly four factors, that is, the time at which to confirm ARDS is one (1) week from the time of clinical insult; bilateral opacities detected using the chest imaging; origin of edema, of which the authors argue that the cardiac failure and fluid overload may not well explain the cause of respiratory failure though they are the best in detecting patients with ARDS; the ARDS was also further defined inform of its severity, that is, mild ($200 < PaO_2/FiO_2 \leq 300$), moderate ($100 < PaO_2/FiO_2 \leq 200$), and severe ($PaO_2/FiO_2 \leq 100$) [11]. The severity of ARDS can also be determined by the amount of the extravascular lung water [12]; the more the lung water, the more severe the ARDS case.

Low positive end-expiratory pressure (PEEP) can improve the oxygenation [13]; however, some authors argue that high PEEP improves PaO_2/FiO_2 compared to the low PEEP [14] for the subgroup of ARDS patients, that is, the severe case of ARDS patients [15, 16, 19].

1.3. Related Work. Sahetya et al. [17] and Brower et al. [18] indicate the required lower PEEP and higher PEEP parameters with respect to their FiO_2 parameter as shown in Table 1 during the ventilation. It is to be noted that the physicians are to follow this PEEP adjustment such as to effectively ventilate the ARDS patient; however, this comes with human errors; physicians during emergency medicine intervention may erroneously adjust the ventilator settings due to reasons such as being tired or low number of physicians who are overwhelmed by the number of patients needing their attention, and the table has no room for flexibility in adjustments, that is, there are few numbers indicated, for example, for a patient receiving lower PEEP has no numbers such as 6, 7, and 9, among others in PEEP adjustment, leaving a gap for the physicians to guess where they are not sure. Nguyen et al. [19, 20] apply the fuzzy rule-based models and use three input parameters, namely, PEEP, peak airway pressure (PAP), and arterial oxygen saturation (SaO_2). The fuzzy system, however, has the challenge that it is not per the ARDS Berlin definition of adjusting PEEP based on the FiO_2 values alone.

In this research, a fuzzy-based approach is used in training the algorithm to understand the parameters that would have been adjusted by the physicians during the ventilation of a patient with ARDS. The fuzzy system consists of crisp input, fuzzification, membership functions, rule base, fuzzy inference system, defuzzification, and crisp output. These are the steps/procedures followed during the design of a fuzzy rule-based system using a fuzzy logic designer and/or neuro-fuzzy designer application installed in MATLAB software. The fuzzy-based Berlin definition system will reduce the physician errors, extrapolate or attain the missing data in PEEP table as shown in Table 1, as well as address the challenges that come with misinterpretation of the ventilator parameters during the ventilation [21].

Table 1: ARDS Berlin definition PEEP adjustments [19, 20].

Input variable	Output variables	
FiO_2	Lower PEEP	Higher PEEP
0.3	5	12
0.3	—	14
0.4	5	14
0.4	8	16
0.5	8	16
0.5	10	18
0.5	—	20
0.6	10	20
0.7	10	20
0.7	12	—
0.7	14	—
0.8	14	20
0.8	—	22
0.9	14	22
0.9	16	—
0.9	18	—
1.0	18–24	22–24

2. Materials and Methods

2.1. Fuzzy Rule Based Model. The fuzzy rule-based system will be used to suggest the medical ventilator parameter adjustments for the physicians by using the Mamdani fuzzy ruled-based model. The functional components of the fuzzy system are explained below.

2.1.1. Crisp Input. The PEEP and FiO_2 parameters were used as the inputs for training the algorithm. Crisp inputs in the fuzzy system represent the raw inputs from the patient.

2.1.2. Fuzzification. The crisp input values are then converted into fuzzy values through membership functions (triangular and trapezoidal membership functions were used in this research), which convert the raw crisp inputs into the degree of truth, that is, between zero (0) and one (1) and including zero (0) and one (1).

2.1.3. Expert Fuzzy System/Rule Base. The fuzzy values then are interpreted using the expert fuzzy system. The expert fuzzy system contains a set of rules or knowledge that maps the fuzzy inputs to the fuzzy outputs. In this research, the rules are constructed from the existing PEEP table as shown in Table 1. The ARDS PEEP adjustment requires that there is an increment of PEEP until the set PEEP matches the FiO_2 value. Therefore, for a particular FiO_2 value having a physician set PEEP less than the desired ARDS PEEP, the change in PEEP (output) was set to "Increase," and for a physician

set PEEP equal to the desired ARDS PEEP, the change in PEEP (output) was set to "Maintain."

2.1.4. Aggregation. The mapping of the fuzzy input values into fuzzy output values using the rule base is done using the membership functions. Here, the fuzzy output values are then passed on for defuzzification.

2.1.5. Defuzzification. The fuzzy output values are then mapped to the crisp outputs using the defuzzification methods; in this research, a centroid defuzzification method was used.

2.1.6. Crisp Output. The crisp output value is a signal that will be used in guiding the physician(s) in adjustment of the medical ventilator parameters.

2.2. Linguistic Terms Used. The "Linguistic meaning/params" column is the membership function parameters of the "Linguistic term" column.

Table 2 shows the parameters of the FiO_2 linguistic terms ranging from F1 to F9. The membership function that was used in this research was the triangular type for F1 to F9, ranging from zero (0) to one (1) since the Berlin definition of ARDS considers a 0-1 scale for FiO_2.

Table 3 shows the parameters of the high PEEP linguistic terms ranging from HP1 to HP8. The membership functions that were used in this research were the trapezoidal type for HP1 and triangular type for HP2 to HP8, ranging from zero (0) to twenty-four (24) since the Berlin definition of ARDS considers a 0–24 scale for PEEP adjustments.

Table 4 shows the parameters of the low PEEP linguistic terms ranging from HP1 to HP9. The membership functions that were used in this research were the trapezoidal type for HP1 and triangular type for HP2 to HP9, ranging from zero (0) to twenty-four (24) since the Berlin definition of ARDS considers a 0–24 scale for PEEP adjustments.

Table 5 shows the parameters of the pH linguistic terms consisting of low, moderate, and high. The membership functions that were used in this research were the trapezoidal type for low and high and triangular type for moderate, ranging from zero (0) to fourteen (14) since the Berlin definition of ARDS considers a 0–14 scale for pH adjustments.

2.3. FiO_2 and PEEP Fuzzy Rules. The fuzzy set rules for low PEEP are shown in Table 6 with the continuation of the fuzzy set rules in Table 6, and for high PEEP, the rules are shown in Table 7.

2.4. Simulink

2.4.1. General System. The design of the system is to guide the physician in determining how much of the adjustments to make during the ventilation after taking measurements from the patient. The system is based on the ARDS Berlin definition of the procedure taken during the ventilation of an ARDS patient.

Table 2: FIO_2 linguistic terms used.

Linguistic term	Linguistic meaning/params
F1	(0, 0, 0.15, 0.26)
F2	(0.24, 0.3, 0.36)
F3	(0.34, 0.4, 0.46)
F4	(0.44, 0.5, 0.56)
F5	(0.54, 0.6, 0.66)
F6	(0.64, 0.7, 0.76)
F7	(0.74, 0.8, 0.86)
F8	(0.84, 0.9, 0.96)
F9	(0.84, 1, 1)

Table 3: High PEEP linguistic terms used.

Linguistic term	Linguistic meaning/params
HP1	(0, 0, 1.25, 3.75)
HP2	(2.5, 9.5, 14.5)
HP3	(13.5, 15, 16.5)
HP4	(15.5, 17, 18.5)
HP5	(17.5, 19, 20.5)
HP6	(19.5, 21, 22.5)
HP7	(21.5, 22, 22.5)
HP8	(21.5, 23, 24)

Table 4: Low PEEP linguistic terms used.

Linguistic term	Linguistic meaning/params
HP1	(0, 0, 1.275, 3.5)
HP2	(2.5, 5, 5.5)
HP3	(4.5, 6.5, 8.5)
HP4	(7.5, 9, 10.5)
HP5	(9.5, 10, 10.5)
HP6	(9.5, 11, 12.5)
HP7	(11.5, 13, 14.5)
HP8	(13.5, 18, 18.5)
HP9	(13.5, 21, 24)

Table 5: pH linguistic terms used.

Linguistic term	Linguistic meaning/params
Low	(0, 0, 7.2, 7.25)
Moderate	(7.15, 7.3, 7.45)
High	(7.35, 7.4, 14, 14)

Figure1 shows a patient whose readings/crisp inputs (inputs to the fuzzy system) are taken, that is, FiO_2, PEEP, and pH. The crisp inputs are fuzzified as shown in Figures 2 and 3. The "FiO_2 and PEEP input subsystem" is a subsystem that generates simulated FiO_2 and PEEP data to be fed into "FiO_2 and PEEP subsystem"; the readings are then taken using the Simulink display and simultaneously plotted using the Simulink scope.

2.4.2. Patient Subsystem. The patient subsystem in Figure 4 is used as a loop path for the "FiO_2 and PEEP subsystem" and "pH fuzzy subsystem." The input 1 (In 1) connected to the output 1 (Out 1) is the FiO_2 and PEEP data from the

Table 6: FiO_2 and low PEEP fuzzy set rules.

Input variable			Output variables
Rule number	FiO_2	PEEP	Change in PEEP
1	F1	HP1	Increase
2	F1	HP2	Increase
3	F1	HP3	Increase
4	F1	HP4	Increase
5	F1	HP5	Increase
6	F1	HP6	Increase
7	F1	HP7	Increase
8	F1	HP8	Increase
9	F2	HP1	Increase
10	F2	HP2	Maintain
11	F2	HP3	Increase
12	F2	HP4	Increase
13	F2	HP5	Increase
14	F2	HP6	Increase
15	F2	HP7	Increase
16	F2	HP8	Increase
17	F3	HP1	Increase
18	F3	HP2	Increase
19	F3	HP3	Maintain
20	F3	HP4	Increase
21	F3	HP5	Increase
22	F3	HP6	Increase
23	F3	HP7	Increase
24	F3	HP8	Increase
25	F4	HP1	Increase
26	F4	HP2	Increase
27	F4	HP3	Increase
28	F4	HP4	Maintain
29	F4	HP5	Increase
30	F4	HP6	Increase
31	F4	HP7	Increase
32	F4	HP8	Increase
33	F5	HP1	Increase
34	F5	HP2	Increase
35	F5	HP3	Increase
36	F5	HP4	Increase
37	F5	HP5	Maintain
38	F5	HP6	Increase
39	F5	HP7	Increase
40	F5	HP8	Increase
41	F6	HP1	Increase
42	F6	HP2	Increase
43	F6	HP3	Increase
44	F6	HP4	Increase
45	F6	HP5	Increase
46	F6	HP6	Maintain
47	F6	HP7	Increase
48	F6	HP8	Increase
49	F7	HP1	Increase
50	F7	HP2	Increase
51	F7	HP3	Increase
52	F7	HP4	Increase
53	F7	HP5	Increase
54	F7	HP6	Increase
55	F7	HP7	Maintain
56	F7	HP8	Increase
57	F8	HP1	Increase
58	F8	HP2	Increase
59	F8	HP3	Increase
60	F8	HP4	Increase
61	F8	HP5	Increase
62	F8	HP6	Increase
63	F8	HP7	Increase
64	F8	HP8	Maintain
65	F9	HP1	Increase
66	F9	HP2	Increase
67	F9	HP3	Increase
68	F9	HP4	Increase
69	F9	HP5	Increase
70	F9	HP6	Increase
71	F9	HP7	Increase
72	F9	HP8	Increase
73	F1	HP9	Increase
74	F2	HP9	Increase
75	F3	HP9	Increase
76	F4	HP9	Increase
77	F5	HP9	Increase
78	F6	HP9	Increase
79	F7	HP9	Increase
80	F8	HP9	Increase
81	F9	HP9	Maintain

patient to the" "FiO_2 and PEEP input subsystem" fuzzy system. The input 2 (In 2) connected to the output 2 (Out 2) is the pH data from the patient to the "pH fuzzy subsystem" fuzzy system.

The output 1 (Out 1) in Figure 4 connects to the input 1 (In 1) in 3; output 3 (Out 2) in Figure 5 connects to the input 1 (In 1) in Figure 4.

The output 2 (Out 2) in Figure 4 connects to the input 1 (In 1) in Figure 3; output 2 (Out 2) in Figure 3 connects to the input 2 (In 2) in Figure 4.

2.4.3. FiO_2 and PEEP Input Subsystem. The input 1 (In 1) is the FiO_2 data passed through the initial condition block (Initial FiO_2) to initialise the signal during the simulation. The signal is set through the code block (initial input code block) whose purpose is to pause the loop after one second; input u0 is connected to the output, y0.

The if-condition (if-condition 3) triggers the signal from the code block output y0; if the output y1 from the code block is equal to zero (0), then the signal is sent from output y0 to memory 2, which is then added on a bias (Bias 3) of 0.1. The if-condition (if-condition 4) helps in triggering the PEEP. The initial PEEP is set to zero (0) and then sent to input; u1 of the code block which is connected to output y1. The signal from the output y1 is added on a bias (Bias 1) of 1, and then the signal is sent to memory 1. The signal is then fed into the code block (loop code block) that contains an if-condition; if input u1 is less than 25, then output y0 is connected to input u1; otherwise, the output y0 is connected to input u0. The simulation stops if the FiO_2 input is greater than 0.9.

The action subsystems ("If Action Subsystem 1.1," "If Action Subsystem 1.2," "If Action Subsystem 3," and "If Action Subsystem 4") are used to relay the original signal

Table 7: FiO_2 and high PEEP fuzzy set rules.

Input variable			Output variables
Rule number	FiO_2	PEEP	Change in PEEP
1	F1	HP1	Increase
2	F1	HP2	Increase
3	F1	HP3	Increase
4	F1	HP4	Increase
5	F1	HP5	Increase
6	F1	HP6	Increase
7	F1	HP7	Increase
8	F1	HP8	Increase
9	F2	HP1	Increase
10	F2	HP2	Maintain
11	F2	HP3	Increase
12	F2	HP4	Increase
13	F2	HP5	Increase
14	F2	HP6	Increase
15	F2	HP7	Increase
16	F2	HP8	Increase
17	F3	HP1	Increase
18	F3	HP2	Increase
19	F3	HP3	Maintain
20	F3	HP4	Increase
21	F3	HP5	Increase
22	F3	HP6	Increase
23	F3	HP7	Increase
24	F3	HP8	Increase
25	F4	HP1	Increase
26	F4	HP2	Increase
27	F4	HP3	Increase
28	F4	HP4	Maintain
29	F4	HP5	Increase
30	F4	HP6	Increase
31	F4	HP7	Increase
32	F4	HP8	Increase
33	F5	HP1	Increase
34	F5	HP2	Increase
35	F5	HP3	Increase
36	F5	HP4	Increase
37	F5	HP5	Maintain
38	F5	HP6	Increase
39	F5	HP7	Increase
40	F5	HP8	Increase
41	F6	HP1	Increase
42	F6	HP2	Increase
43	F6	HP3	Increase
44	F6	HP4	Increase
45	F6	HP5	Maintain
46	F6	HP6	Increase
47	F6	HP7	Increase
48	F6	HP8	Increase
49	F7	HP1	Increase
50	F7	HP2	Increase
51	F7	HP3	Increase
52	F7	HP4	Increase
53	F7	HP5	Increase
54	F7	HP6	Maintain
55	F7	HP7	Increase
56	F7	HP8	Increase
57	F8	HP1	Increase
58	F8	HP2	Increase
59	F8	HP3	Increase
60	F8	HP4	Increase
61	F8	HP5	Increase
62	F8	HP6	Increase
63	F8	HP7	Maintain
64	F8	HP8	Increase
65	F9	HP1	Increase
66	F9	HP2	Increase
67	F9	HP3	Increase
68	F9	HP4	Increase
69	F9	HP5	Increase
70	F9	HP6	Increase
71	F9	HP7	Increase
72	F9	HP8	Maintain

since the signal sent from the if-condition block is a trigger signal.

The output 1 (In 3) in Figure 5 connects to the input 1 (In 1) in Figure 2; output 2 (In 2) in Figure 5 connects to the input 2 (In 2) in Figure 2.

2.4.4. FiO_2 and PEEP Fuzzy Subsystem. The inputs (In 1 and In 2) are fed into the Fuzzy Logic Controller (FLC) as crisp inputs and then output as crisp output which is the change in the PEEP to be made. The output (change in PEEP) is then added to the initial PEEP. The output 1 (Out 1) in Figure 2 is then displayed and plotted using the Simulink display and scope, respectively.

The if-condition (If-condition 1) is used to generate the PEEP data for as long as the PEEP is less than or equal to 24.

2.4.5. pH Fuzzy Subsystem. Table 8 shows the linguistic terms used for pH, respiratory rate, and change in tidal volume. The pH was used as the input variable to guide in adjusting the output variables, namely, respiratory rate and change in tidal volume.

From Figure 3, the initial input of the pH is started with zero (0) in the simulation and then fed into the Fuzzy Logic Controller1 (FLC1) as crisp input; the crisp outputs are the changes in the respiratory rates and tidal volumes. There is a bias (Bias 1) of 0.1 that is added to memory 1 to make a loop so as to generate data for simulation. The simulation is stopped if pH is greater than 14. The output 1 (Out 1) is then connected to the Simulink display and scope.

The membership functions used in designing the FLC are shown in Figures 6–12.

3. Results and Discussion

The results were attained from the Fuzzy Logic Designer rule viewer and Fuzzy Logic Designer surface, and the Neuro-Fuzzy Designer was used to imitate the exact output expected from the acute respiratory distress syndrome network (ARDSNet) protocol for positive end expiratory pressure (PEEP) during the ventilation of ARDS patients; the

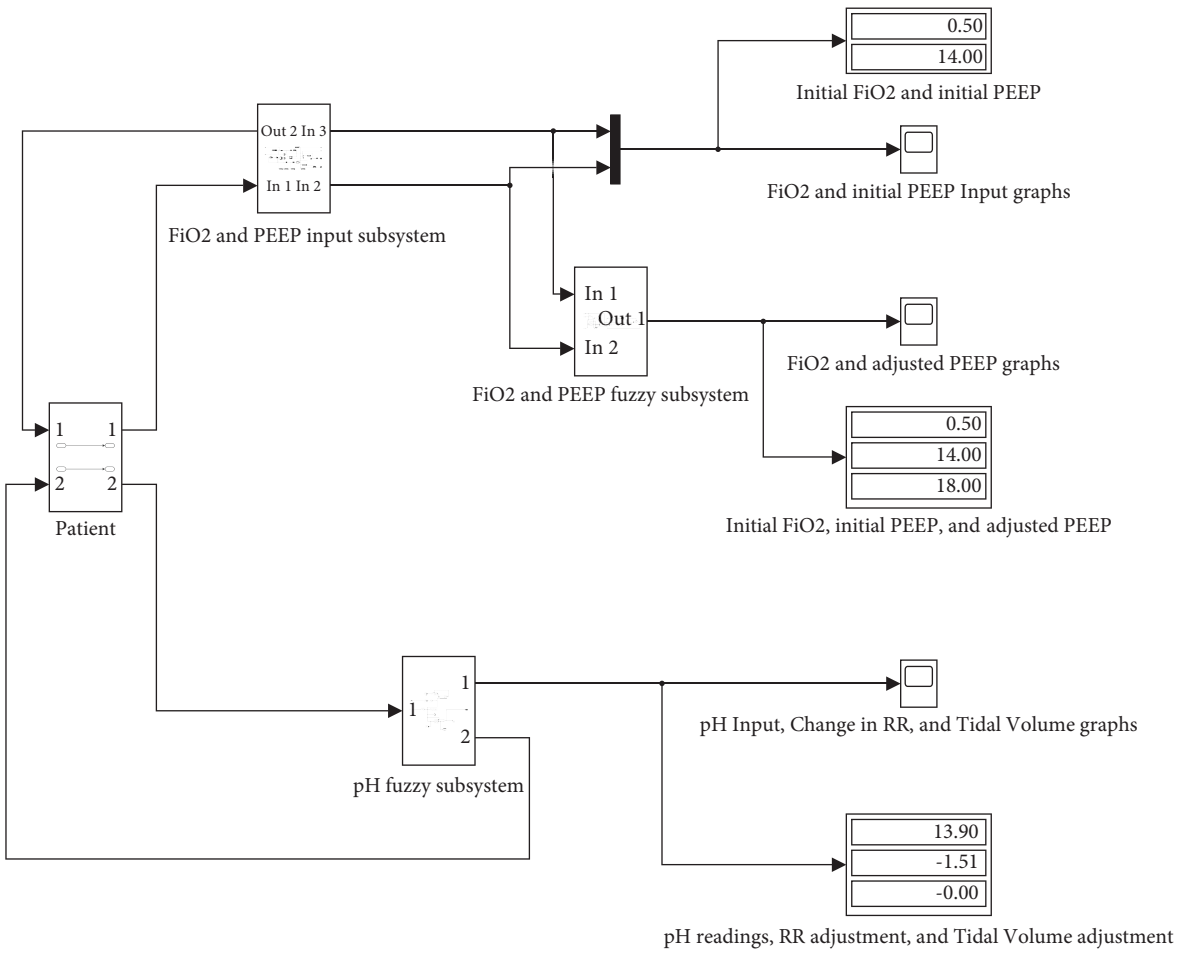

Figure 1: General fuzzy based ARDS Berlin definition.

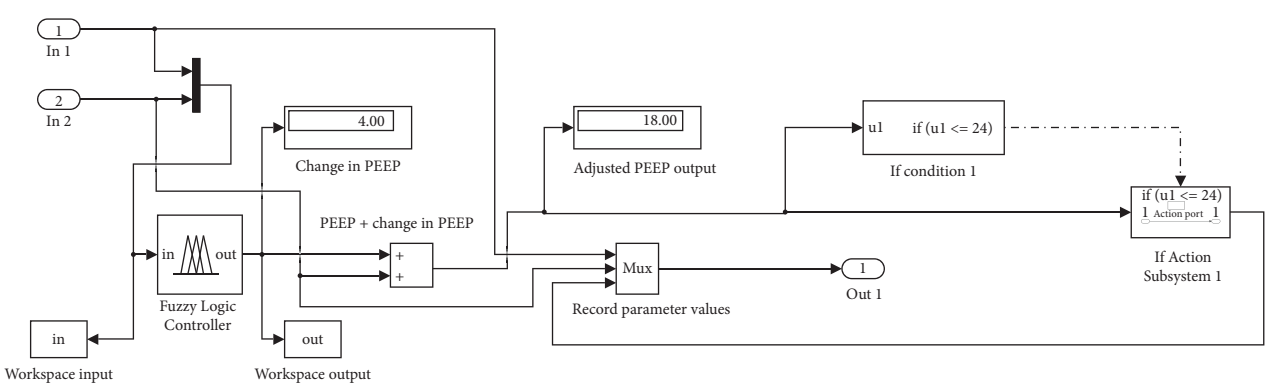

Figure 2: FiO_2 and PEEP fuzzy subsystem.

algorithms were then used in the simulation using the graphical and interactive Simulink tool in MATLAB software.

Tables 9 and 10 show the comparison between the physician-based Berlin definition of ARDS using the ARDSNet protocol [17, 19] and the fuzzy based Berlin definition of ARDS. The ARDSNet protocol requires that there is a PEEP adjustment of 2 to 4 during the ventilation which is why the adjustments in Tables 9 and 10 do not exceed 4 in value adjustment.

It is noticed that the physician-based Berlin definition of ARDS has whole numbers compared to fuzzified system of Berlin definition of ARDS. This implies that the fuzzy-based Berlin definition of the ARDS system is more

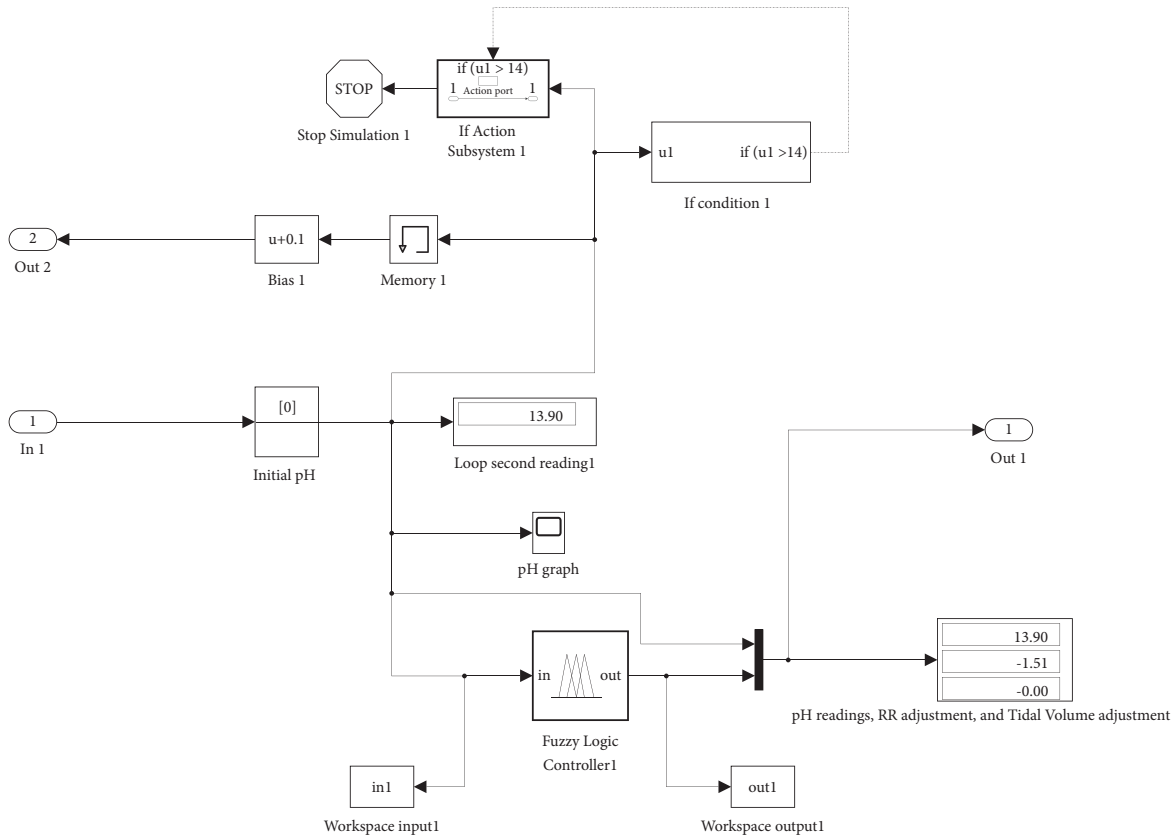

Figure 3: pH fuzzy subsystem.

Figure 4: Patient subsystem.

accurate since it considers how fast the system makes the decision and its application of the possibility theory in adjustments of the PEEP.

3.1. Simulink Graphs

3.1.1. FiO_2 Input and Initial PEEP Input Graph. Sahetya et al. [17] and Brower et al. [19] indicate the recommended range for PEEP values as 0–24 and the values of FiO_2 range of 0-1. So, Figure 13 shows the graph indicating the recommended ranges of the input data (PEEP and FiO_2) on the y-axis against time on the x-axis. The plot in blue colour shows the initial PEEP input range readings from 0 to 24, and the plot in yellow colour (which is close to the x-axis) represents the FiO_2 recommended range input readings from 0 to 1. Then, Figure 14 shows the high PEEP ARDSNet protocol used in treating patients with ARDS (the graph was generated using the fuzzy neural network to mimic the exact values indicated by the authors [17, 19]); the red coloured PEEP (ARDSNet protocol recommended high PEEP adjustments) plots depend on the yellow coloured FiO_2 inputs; as the FiO_2 inputs change, so do the PEEP values (labelled as "Berlin High PEEP" on the graph). The blue plots are still shown in Figure 14 to represent the whole range of the recommended high PEEP values.

3.1.2. FiO_2 Input, Initial High PEEP Input, and Adjusted PEEP Output Graph. Figure 15 shows the simulated results after employing the fuzzy logic reasoning of the high PEEP algorithm. As explained previously, the plots in yellow colour are the FiO_2 inputs, initial PEEP inputs are in blue colour, and the fuzzified outputs (labelled as "adjusted PEEP output" on the graph) are in the red colour. The graph shows how the FiO_2 input when adjusted affects the fuzzified outputs. For example, when the FiO_2 value changed from 0 (zero) to 0.1, no change was indicated in the fuzzified output since the recommended PEEP is not indicated in Table 1. When the FiO_2 input changed to 0.3, the fuzzified output changed on the graph to match the recommended PEEP value of up-to 14 as shown in Table 1. The graph shows that it covers up the data missing in Table 1; when FiO_2 input

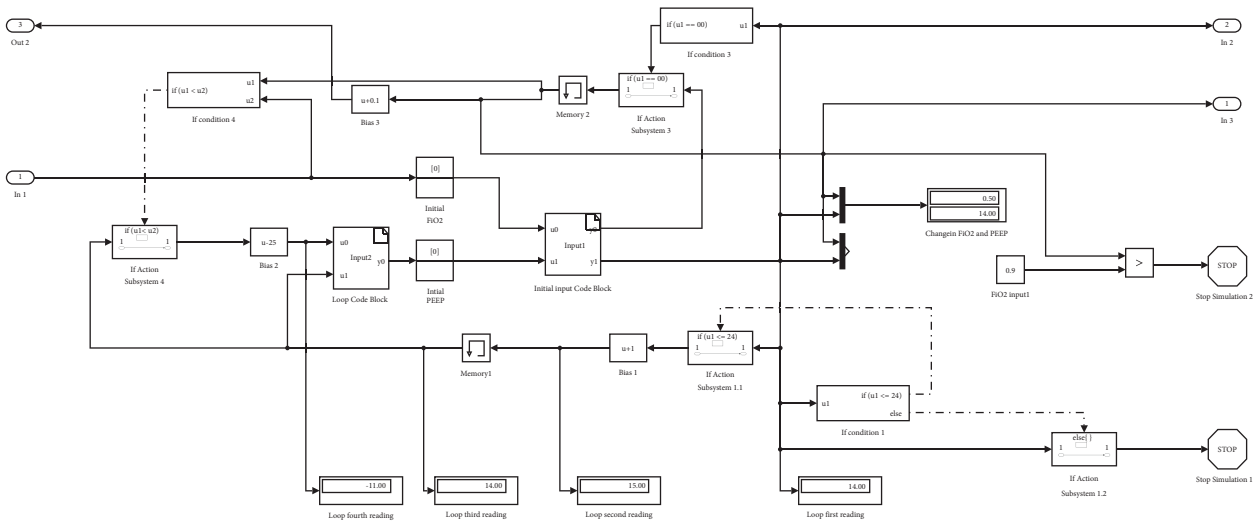

Figure 5: FiO_2 and PEEP input system.

Table 8: pH, respiratory rate, and tidal volume fuzzy set rules.

Input variable		Output variables	
Rule number	pH	Respiratory rate change	Tidal volume change
1	Low	Increase	Increase
2	Moderate	Maintain	Maintain
3	High	Decrease	Maintain

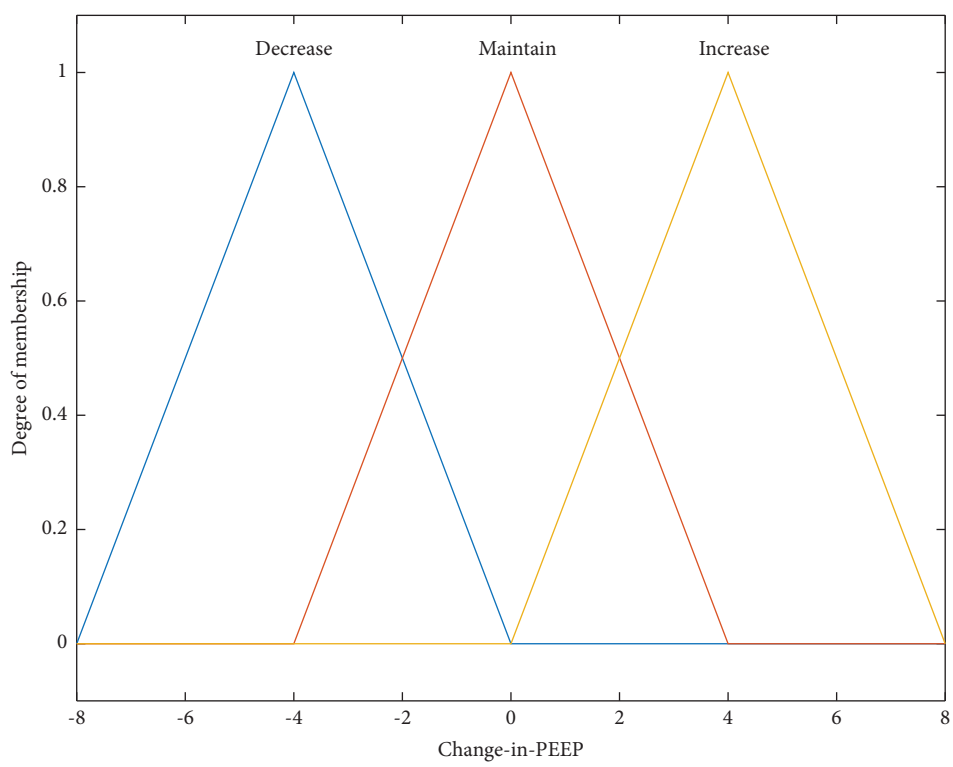

Figure 6: Membership function for change in PEEP output.

changed to 0.4, the fuzzified output changed as well up-to PEEP 16; the fuzzified PEEP values keep on changing based on the FiO_2 inputs as guided by Table 1.

3.1.3. FiO_2 Input, Initial Low PEEP Input, and Adjusted PEEP Output Graph. Figure 16 shows the low PEEP ARDSNet protocol used in treating patients with ARDS (the graph was

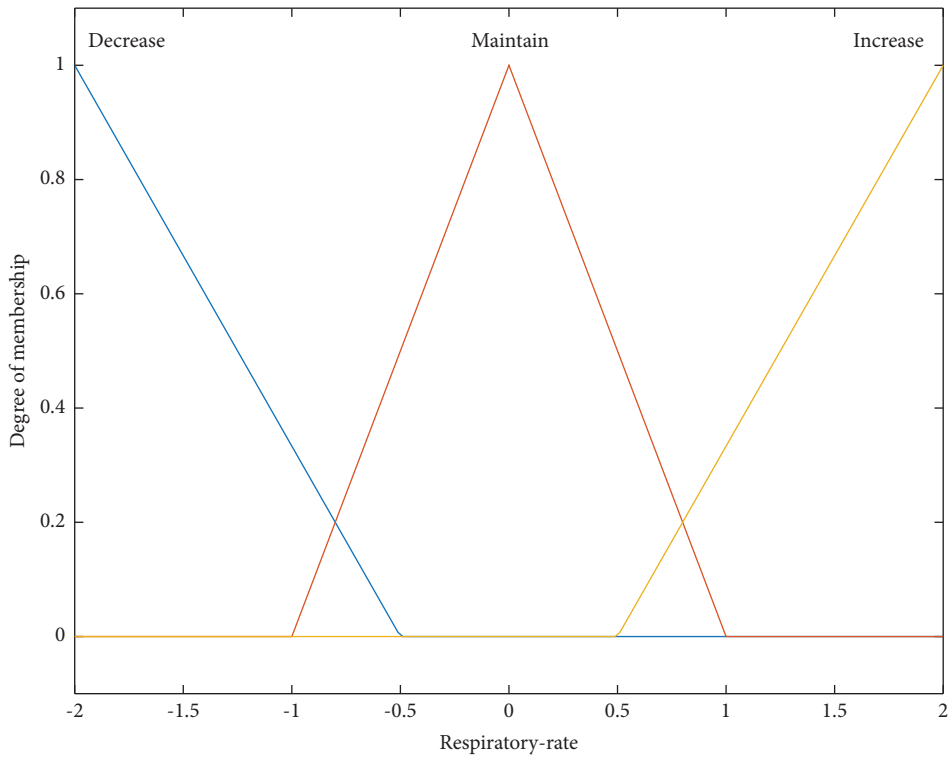

Figure 7: Membership function for change in respiratory rate output.

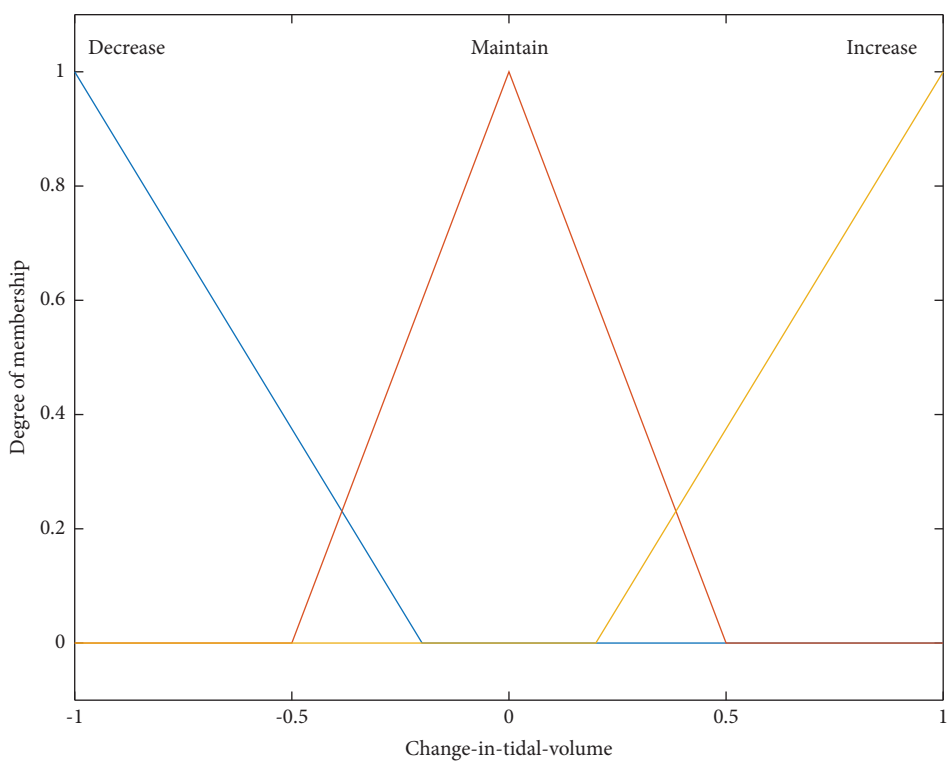

Figure 8: Membership function for change in tidal volume output.

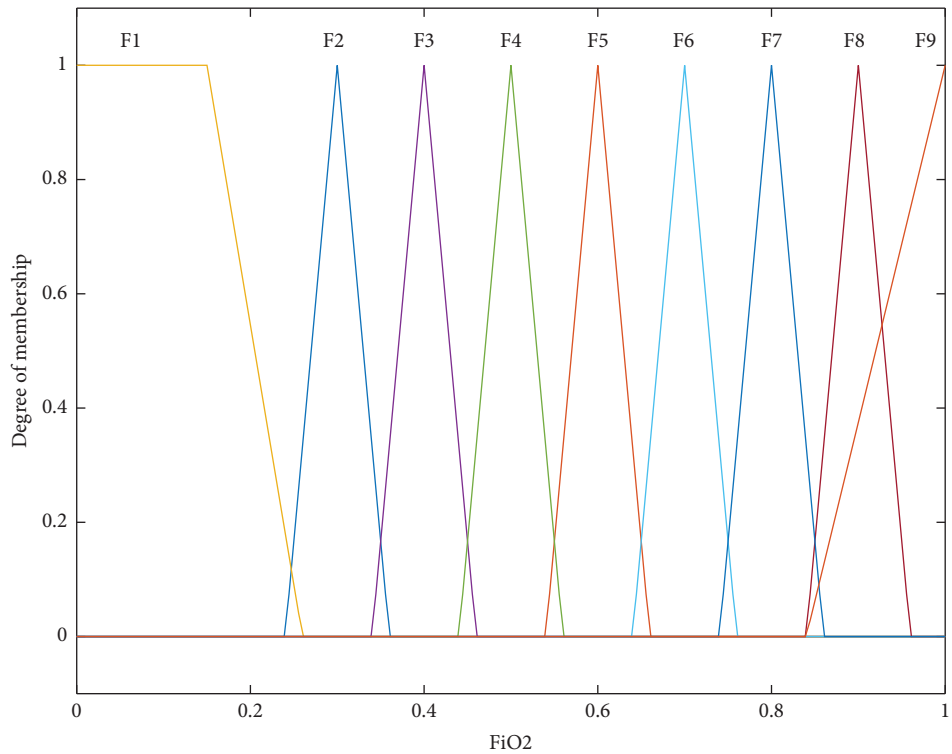

Figure 9: Membership function for FiO_2 input.

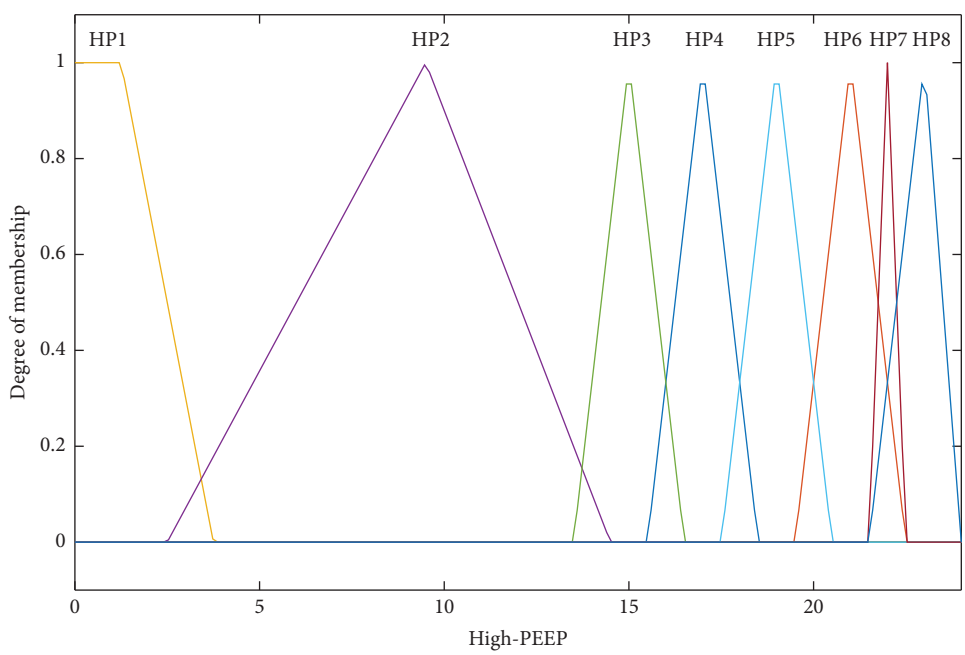

Figure 10: Membership function for high PEEP input.

generated using the fuzzy neural network to mimic the exact values indicated by the authors [17, 19]); the red coloured PEEP (ARDSNet protocol recommended low PEEP adjustments) plots depend on the yellow coloured FiO_2 inputs; as the FiO_2 inputs change, so do the PEEP values (labelled as "Berlin low PEEP" on the graph). The blue plots are still shown in Figure 16 to represent the whole range of the recommended low PEEP values.

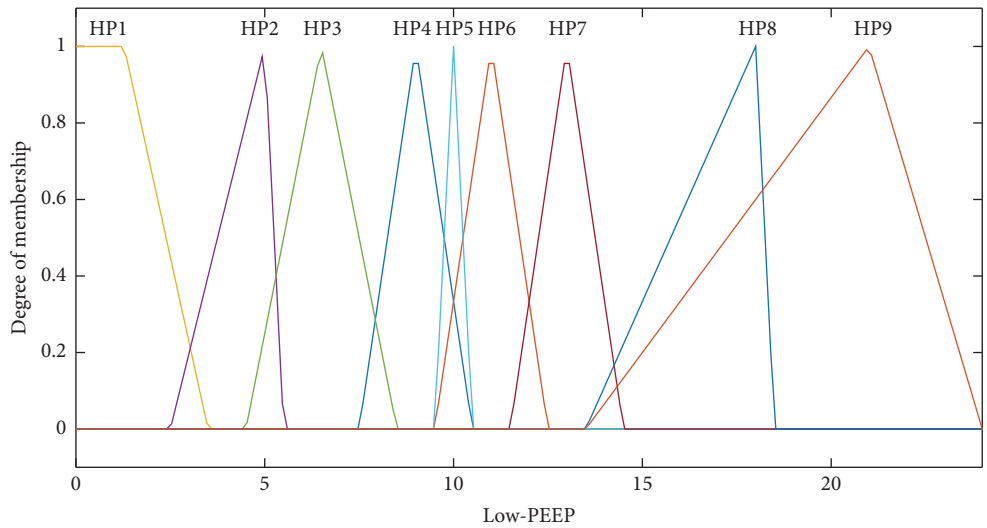

Figure 11: Membership function for low PEEP input.

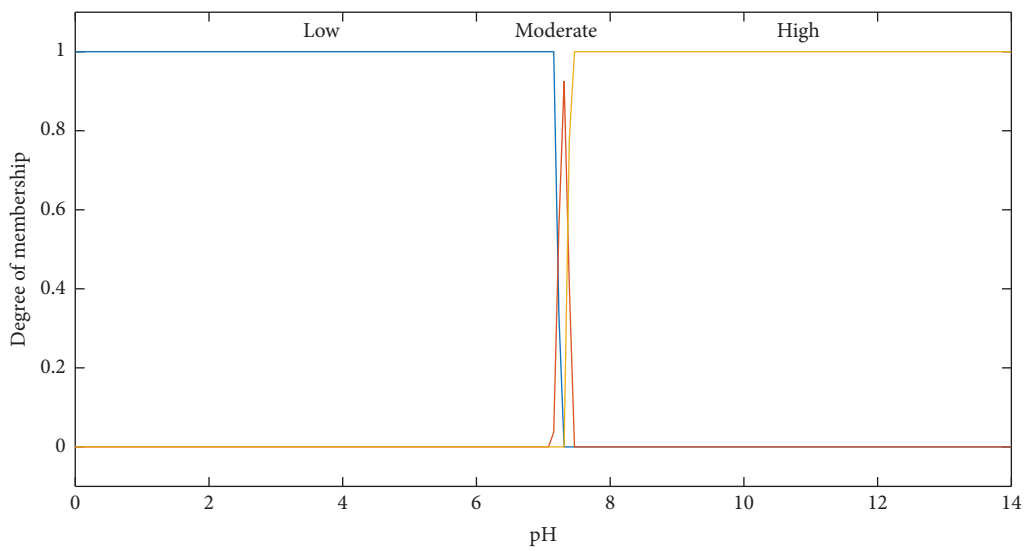

Figure 12: Membership function for pH input.

Table 9: Comparison between physician-based Berlin high PEEP definition and fuzzified Berlin high PEEP definition.

Input variable	Output variables	
FiO_2	Physician PEEP [17]	Fuzzy PEEP
0.3	12	$12 + 3.85 \times 10^{-17}$
0.3	14	14 + 3.12
0.4	14	14 + 0.884
0.4	16	16 + 2
0.5	16	16 + 2
0.5	18	18 + 2
0.5	20	20 + 4
0.6	20	20 + 2
0.7	20	20 + 2
0.8	20	20 + 2
0.8	22	22 + 2.67
0.9	22	22 + 1.43
1.0	22–24	22 + 2.67–24 + 0

Table 10: Comparison between physician-based Berlin low PEEP definition and fuzzified Berlin low PEEP definition.

Input variable	Output variables	
FiO_2	Physician PEEP [17]	Fuzzy PEEP
0.3	5	5 + 1.7
0.4	5	5 + 3.31
0.4	8	8 + 2.89
0.5	8	8 + 2.39
0.5	10	10 + 3.14
0.6	10	10 + 1.96
0.7	10	10 + 3.14
0.7	12	12 + 2.64
0.7	14	14 + 4
0.8	14	14 + 1.55
0.9	14	14 + 3.43
0.9	16	16 + 2.31
0.9	18	18 + 2.39
1.0	18–24	18 + 2.75–24 + 0

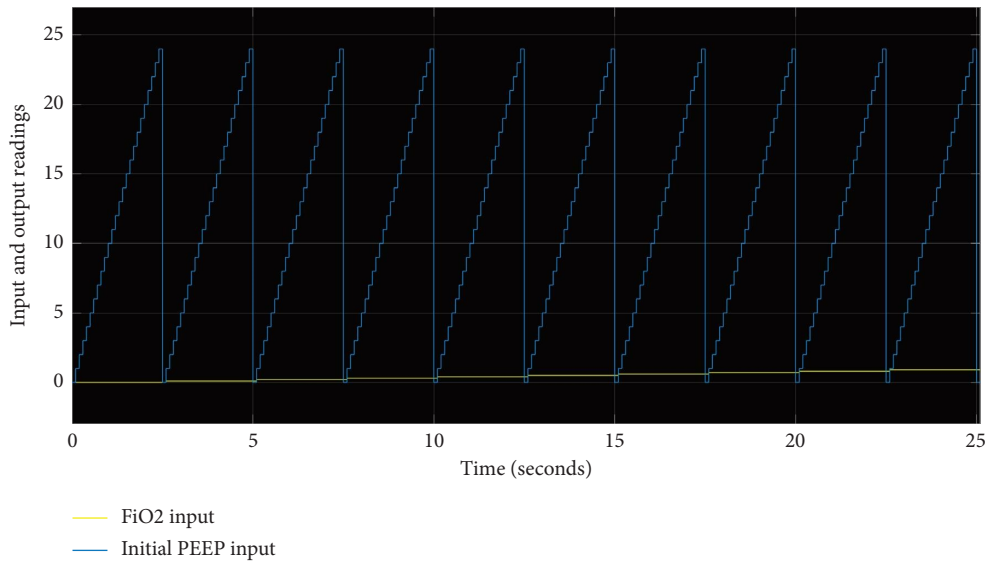

Figure 13: FiO_2 input and non-fuzzified initial PEEP input graph.

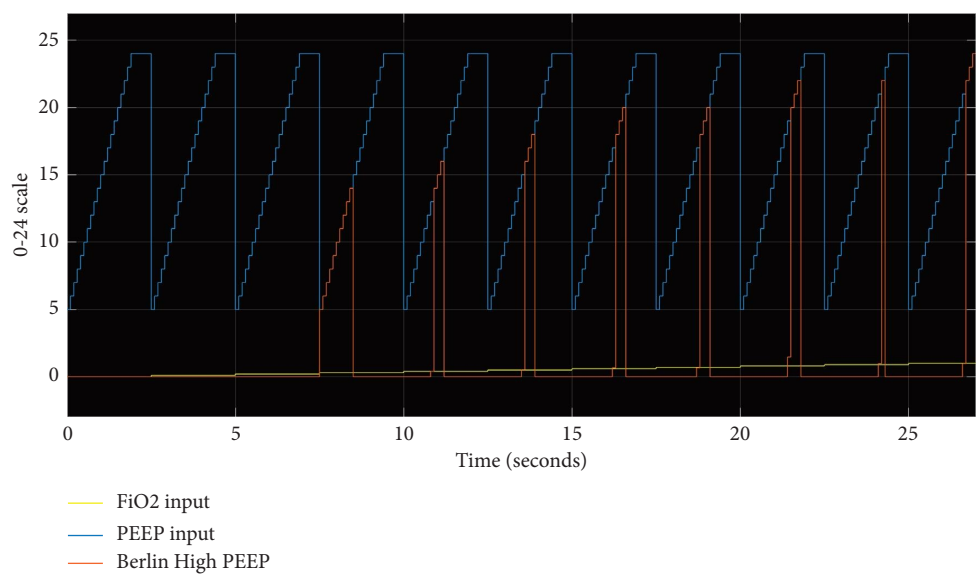

Figure 14: Graph showing the relationship between the two input parameters: FiO_2 (yellow in colour) and general range of PEEP (blue in colour), with the fuzzifed Berlin high PEEP output (red in colour).

Figure 17 shows the simulated results after employing the fuzzy logic reasoning of the low PEEP algorithm. The plots in yellow colour are the FiO_2 inputs, the plots in blue colour are the initial PEEP inputs, and the outputs (adjusted PEEP output) are in the red colour. The graphs indicate the same procedure as for Figure 15, with the only difference that the algorithm was trained using the low PEEP values.

3.1.4. pH Input, Respiratory Rate Adjustment, and Tidal Volume Adjustment Graph. Figure 18 shows the simulated results of the pH algorithm after employing fuzzy logic reasoning. The plots in yellow colour are the pH inputs, the plots in blue colour are the fuzzified respiratory rate outputs, and the fuzzified tidal volume adjustment outputs are in the red colour. The graph shows how, according to the ARDS Berlin definition, the input pH parameter should affect the adjustments of the respiratory rate and tidal volume.

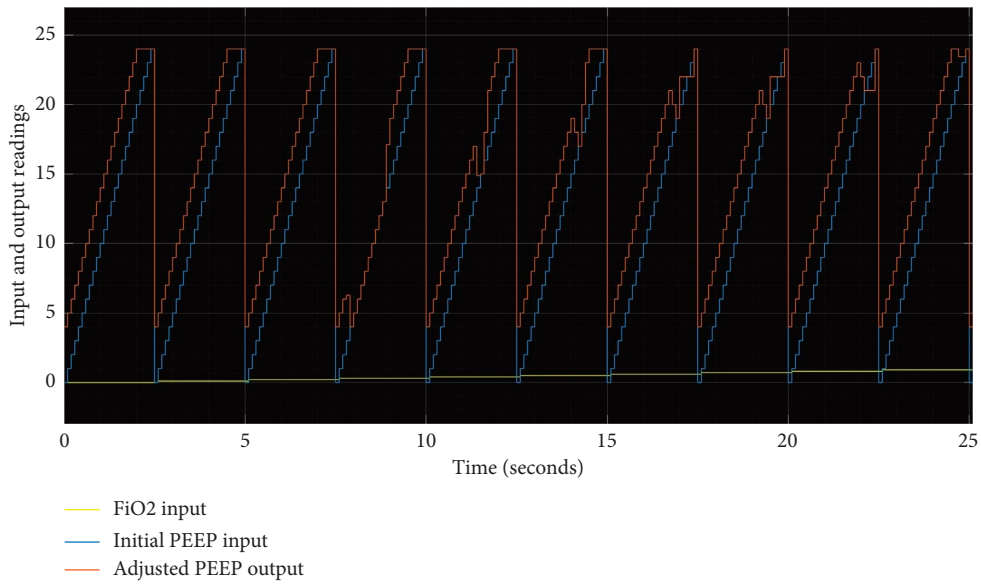

Figure 15: FiO_2 input, non-fuzzifed initial high PEEP input, and fuzzified adjusted PEEP output graph.

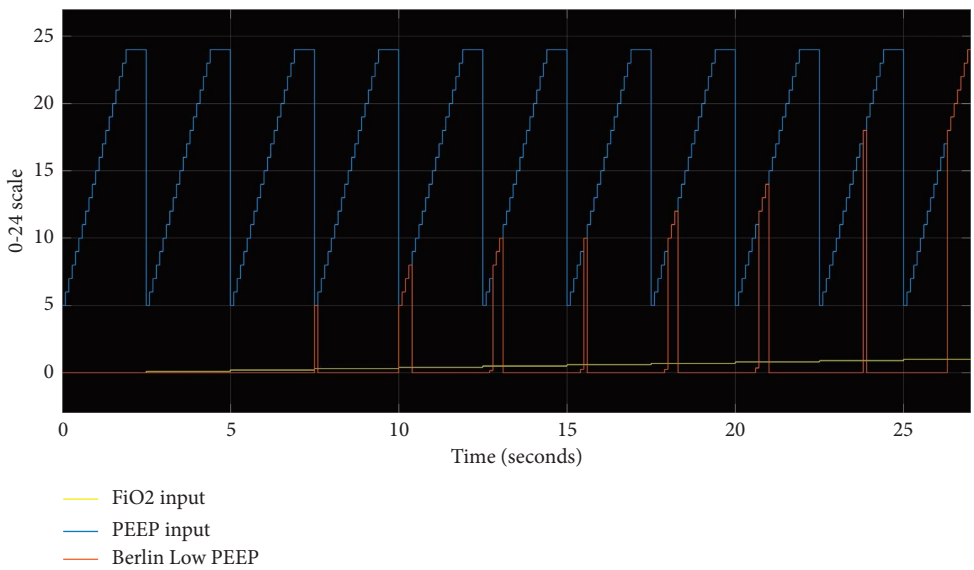

Figure 16: Graph showing the relationship between the two input parameters: FiO_2 (yellow in colour) and general range of PEEP (blue in colour), with the fuzzified Berlin low PEEP output (red in colour).

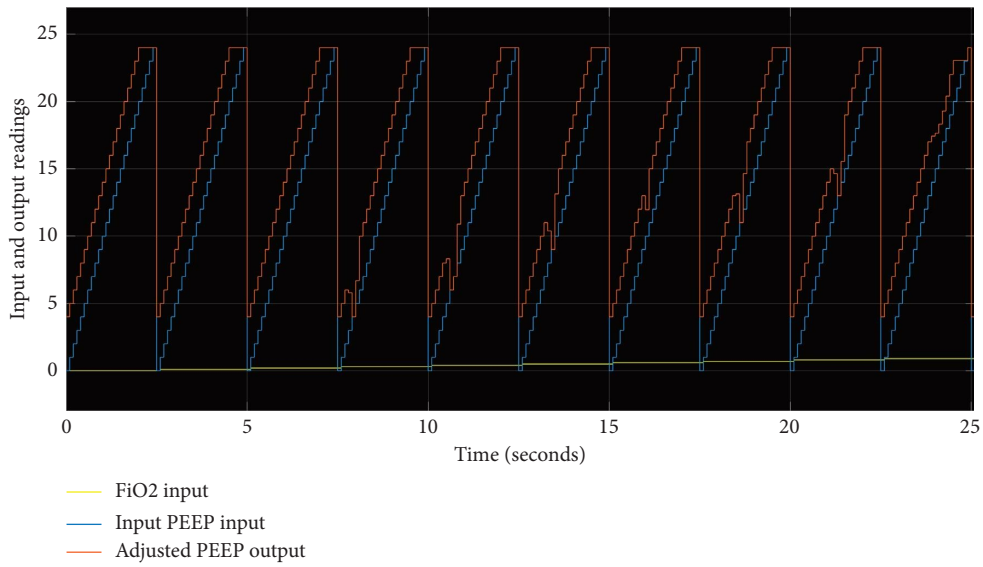

Figure 17: FiO_2 input, non-fuzzified initial low PEEP input, and fuzzified adjusted PEEP output graph.

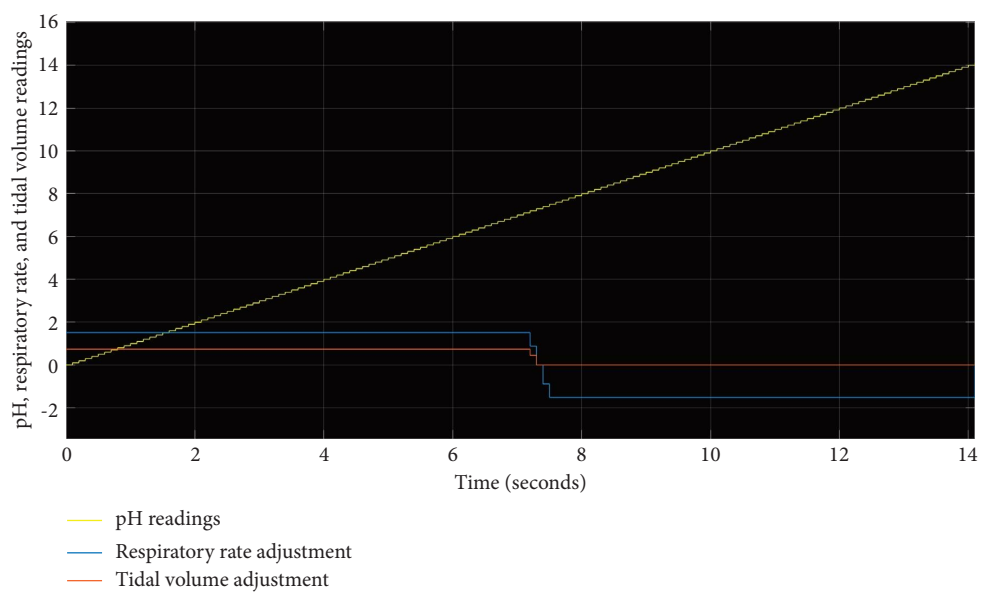

Figure 18: pH input, fuzzified change in respiratory rate adjustment, and fuzzified change in tidal volume adjustment graph.

When the pH < 7.2, there is an increment change/difference in respiratory rate and tidal volume; when pH is between 7.2 and 7.4, no change (zero) is made for respiratory rate and tidal volume; when the pH > 7.4, change in respiratory rate is reduced and tidal volume is maintained.

Based on the ARDS treatment protocol, once the patient stabilises, the designed algorithms will have achieved the significant change in a patient from severe $PaO_2/FiO_2 \leq 100$) to moderate ($100 < PaO_2/FiO_2 \leq 200$) to mild ($200 < PaO_2/FiO_2 \leq 300$) or fully recovered.

4. Conclusion

The MATLAB Simulink was used to simulate the system. The results show that the fuzzy-based ARDS Berlin definition can guide the physician on the adjustments to be made during the ventilation with more accuracy. This, therefore, will reduce the death related errors made by the physicians due to human errors and will increase the speed of decision-making during ventilation.

Data Availability

The data generated or analyzed to support the findings of this study are included within the article.

Conflicts of Interest

The authors declare that they have no conflicts of interest.

References

[1] D. G. Ashbaugh, D. Boyd Bigelow, T. L. Petty, and B. E. Levine, "Acute respiratory distress in adults," *The Lancet*, vol. 290, no. 7511, pp. 319–323, 1967.

[2] G. R. Bernard, A. Artigas, K. L. Brigham et al., "The American-European Consensus Conference on ARDS. Definitions, mechanisms, relevant outcomes, and clinical trial coordination," *American Journal of Respiratory and Critical Care Medicine*, vol. 149, no. 3, pp. 818–824, 1994.

[3] A. Artigas, G. R. Bernard, J. Carlet et al., "The American-European Consensus Conference on ARDS, part 2: ventilatory, pharmacologic, supportive therapy, study design strategies, and issues related to recovery and remodeling Acute respiratory distress syndrome," *American Journal of Respiratory and Critical Care Medicine*, vol. 157, no. 4, pp. 1332–1347, 1998.

[4] D. Chiumello, A. Marino, and A. Cammaroto, "The acute respiratory distress syndrome: diagnosis and management," in *Practical Trends in Anesthesia and Intensive Care 2018*, D. Chiumello, Ed., Springer, Heidelberg, Germany, 2019.

[5] A. Murai, H. Ishikura, N. Matsumoto et al., "Impact of fluid management during the three ICU days after admission in patients with ARDS," *Critical Care*, vol. 18, no. 2, 2014.

[6] A. De Jong, D. Verzilli, and S. Jaber, "ARDS in obese patients: specificities and management," *Critical Care*, vol. 23, no. 1, p. 74, 2019.

[7] D. R. Dancey, J. Hayes, M. Gomez et al., "ARDS in patients with thermal injury," *Intensive Care Medicine*, vol. 25, no. 11, pp. 1231–1236, 1999.

[8] B. Gosangi, A. N. Rubinowitz, D. Irugu, C. Gange, A. Bader, and I. Cortopassi, "COVID-19 ARDS: a review of imaging features and overview of mechanical ventilation and its complications," *Emergency Radiology*, vol. 29, no. 1, pp. 23–34, 2022.

[9] C. Ferrando, F. Suarez-Sipmann, R. Mellado-Artigas et al., "Clinical features, ventilatory management, and outcome of ARDS caused by COVID-19 are similar to other causes of ARDS," *Intensive Care Medicine*, vol. 46, no. 12, pp. 2200–2211, 2020.

[10] S. Hashimoto, M. Sanui, M. Egi et al., "The clinical practice guideline for the management of ARDS in Japan," *j intensive care*, vol. 5, no. 1, 2017.

[11] N. D. Ferguson, E. Fan, L. Camporota et al., "The Berlin definition of ARDS: an expanded rationale, justification, and supplementary material," *Intensive Care Medicine*, vol. 38, no. 10, pp. 1573–1582, 2012.

[12] S. Kushimoto, T. Endo, S. Yamanouchi et al., "Relationship between extravascular lung water and severity categories of acute respiratory distress syndrome by the Berlin definition," *Critical Care*, vol. 17, no. 4, p. R132, 2013.

[13] L. Gattinoni, P. Caironi, M. Cressoni et al., "Lung recruitment in patients with the acute respiratory distress syndrome," *New England Journal of Medicine*, vol. 354, no. 17, pp. 1775–1786, 2006.

[14] L. Guo, J. Xie, Y. Huang et al., "Higher PEEP improves outcomes in ARDS patients with clinically objective positive oxygenation response to PEEP: a systematic review and meta-analysis," *BMC Anesthesiology*, vol. 18, no. 1, p. 172, 2018.

[15] L. Gattinoni, P. Caironi, and M. Cressoni, "Refining ventilatory treatment for acute lung injury and acute respiratory distress syndrome," *JAMA*, vol. 299, no. 6, pp. 691–693, 2008.

[16] M. O. Meade, D. J. Cook, G. H. Guyatt et al., "Lung open ventilation study investigators. Ventilation strategy using low tidal volumes, recruitment maneuvers, and high positive end-expiratory pressure for acute lung injury and acute respiratory distress syndrome: a randomized controlled trial," *JAMA*, vol. 299, no. 6, pp. 637–645, 2008.

[17] S. K. Sahetya, E. C. Goligher, and R. G. Brower, "Fifty years of research in ARDS. Setting positive end-expiratory pressure in acute respiratory distress syndrome," *American Journal of Respiratory and Critical Care Medicine*, vol. 195, no. 11, pp. 1429–1438, 2017.

[18] R. G. Brower, P. N. Lanken, N. MacIntyre et al., "Higher versus lower positive end-expiratory pressures in patients with the acute respiratory distress syndrome," *New England Journal of Medicine*, vol. 351, no. 4, pp. 327–336, 2004.

[19] B. Nguyen, D. B. Bernstein, and J. H. Bates, "Controlling mechanical ventilation in acute respiratory distress syndrome with fuzzy logic," *Journal of Critical Care*, vol. 29, no. 4, pp. 551–556, 2014.

[20] D. B. Bernstein, B. Nguyen, G. B. Allen, and J. H. T. Bates, "Elucidating the fuzziness in physician decision making in ARDS," *Journal of Clinical Monitoring and Computing*, vol. 27, no. 3, pp. 357–363, 2013.

[21] E. Bialais, L. Vignaux, X. Wittebole et al., "Comparison of an entirely automated ventilation mode, Intellivent-ASV, with conventional ventilation in ARDS patients: a 48-hour study," *Critical Care*, vol. 17, no. 2, p. 98, 2013.